ASUS ZB633KL_RF (WW) Trouble Shooting Guide

1.RF Areas

The need to calibrate the range is as follows: “phone2G/3G/4G”、“MCP”

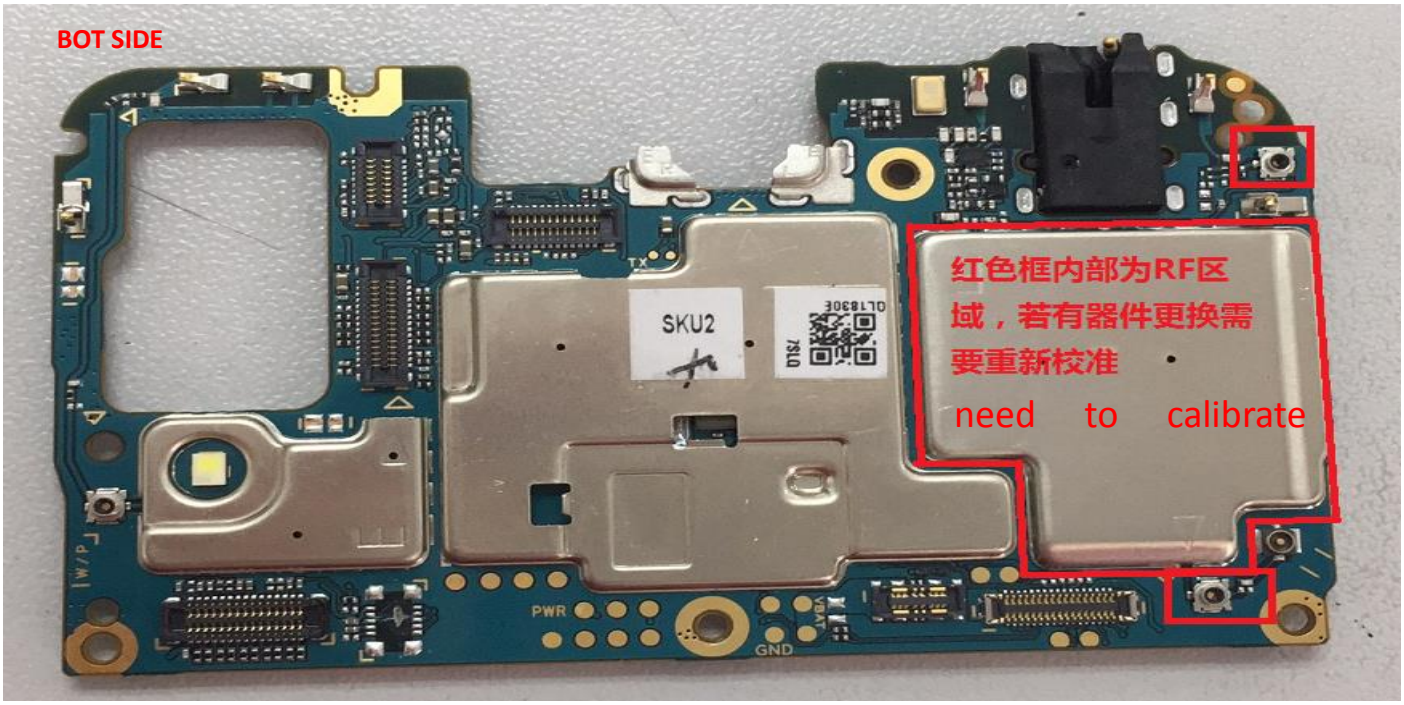

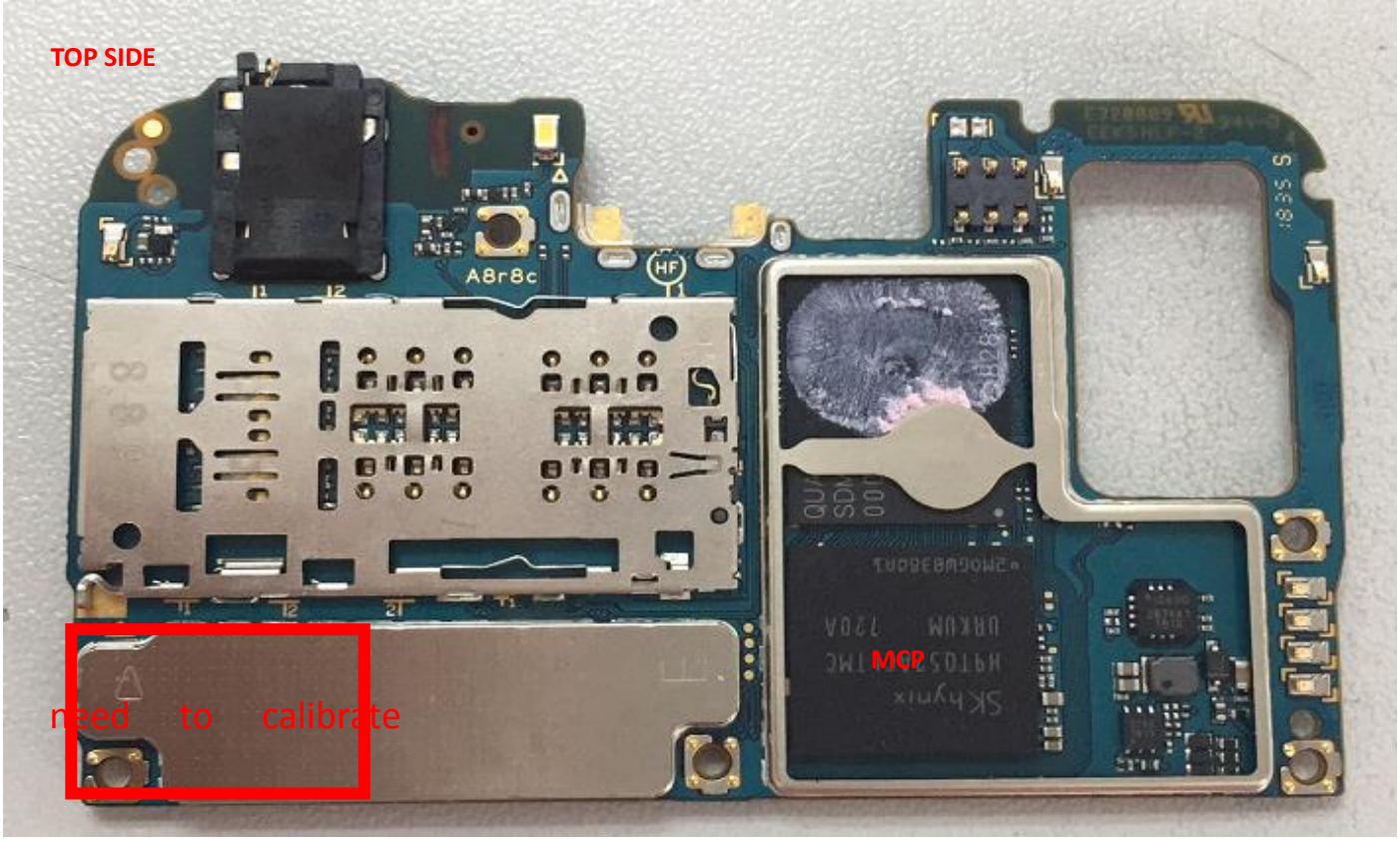

***Supported 2G/3G/4GBands for ZQL1830:**

GSM850/900/1800/1900 ， WCDMA850/900/2100

TDD-LTE B40, FDD-LTE B1/3/5/7/8/20

2.GSM(2G)/WCDMA(3G)/LTE(4G) RF

2.1 Circuit diagram

Product Spec	
Processor	Snapdragon™ 600 series processor and LTE modem, 64-bit, quad high-performance cores targeting 1.8048 GHz, ARM v-8
Modem	GSM/GPRS/EDGE; WCDMA/HSPA+/DC-HSPA+; TD-SCDMA; CDMA 2000; FDD-LTE; TD-LTE
Peak Data Rate	**636/660: DC-HSPA+ (DL/UL): 42/5.76 Mbps; LTE 3CA CAT12/CAT13(DL/UL): 600/150 Mbps; LTE 2CA Cat13/CAT5 (DL/UL): 400/75 Mbps (above different by SKU)**
RF Band Support	TW SKU: GSM 850/900/1800/1900 WCDMA 1/2/3/5/6/8/19 FDD 1/2/3/5/7/8/18/19/28 TDD 38/39/41(2545 ~2655MHz)
	WW SKU: GSM 850/900/1800/1900 WCDMA 1/5/8 FDD 1/3/5/7/8/20 TDD 40

RF Main SET 2/3/4G:

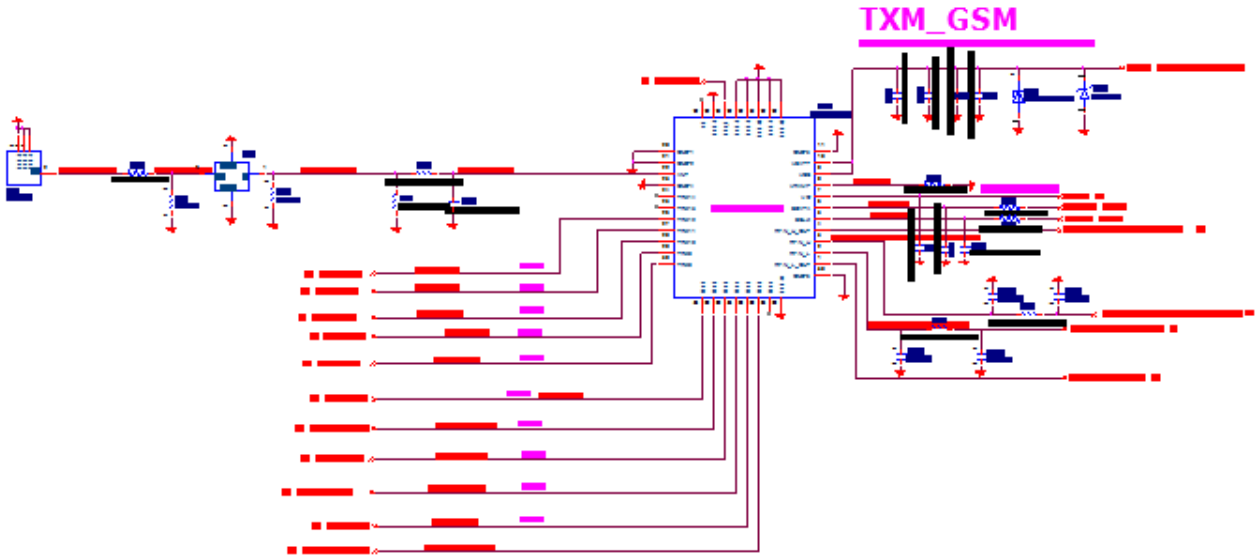

GSM:

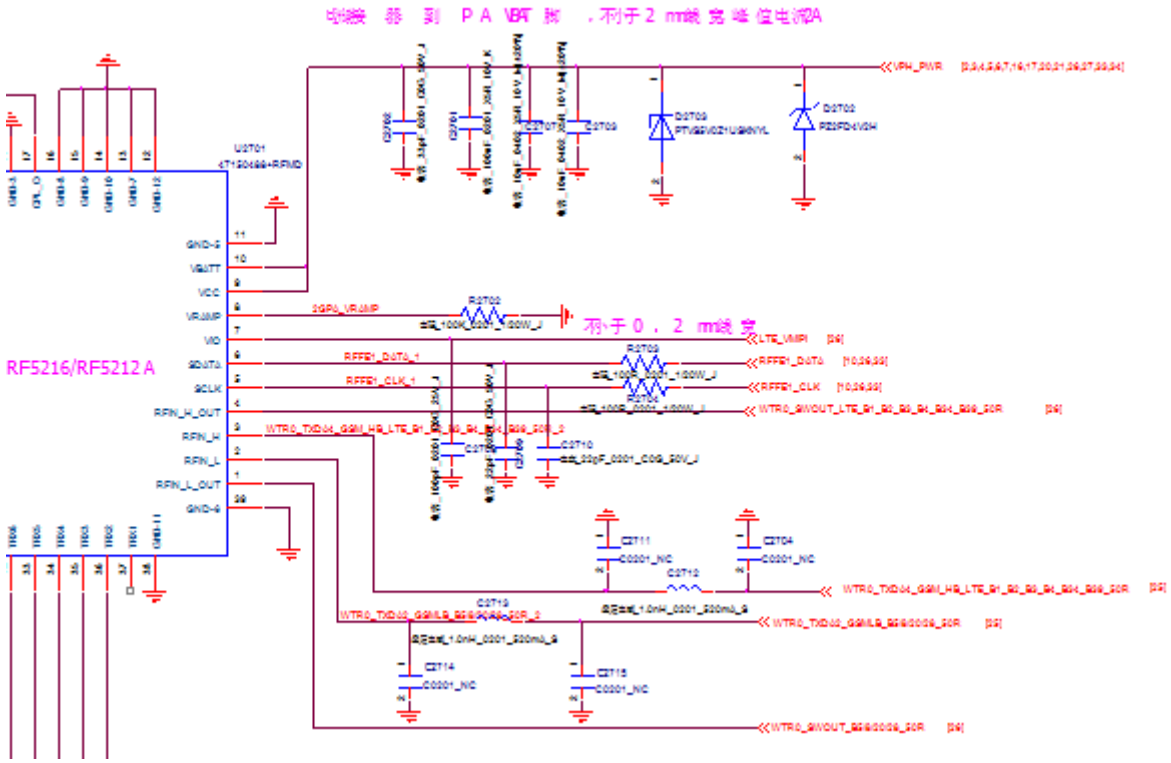

WCDMA+LTE PA:

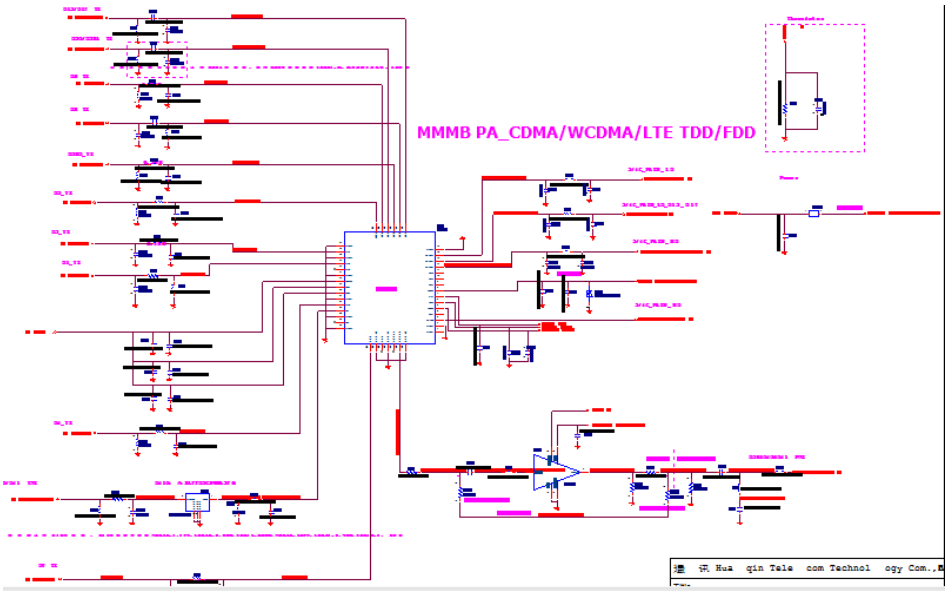

B1Duplexer:

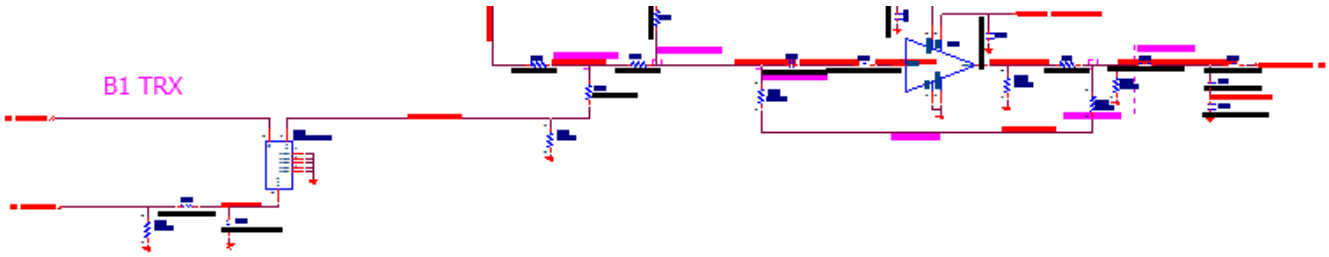

B2Duplexer:

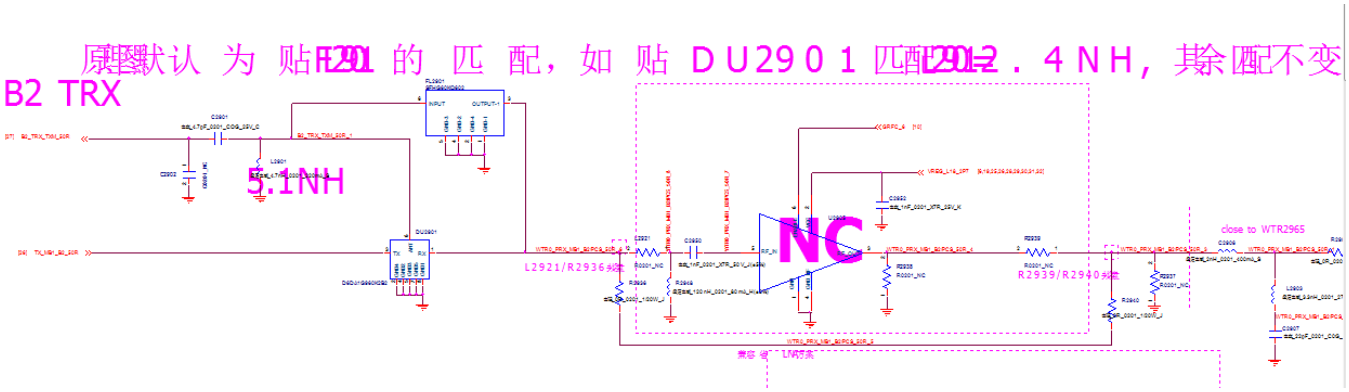

B3 Duplexer:

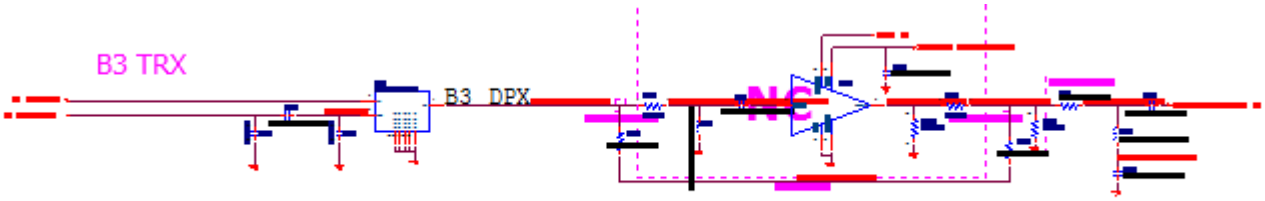

B4 Duplexer:

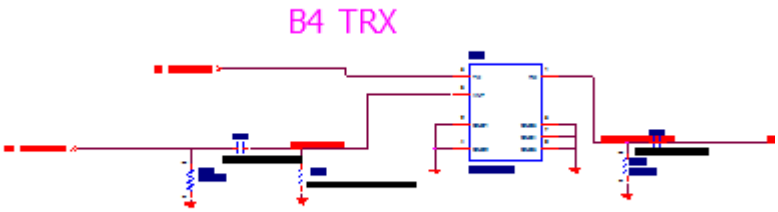

B5 Duplexer:

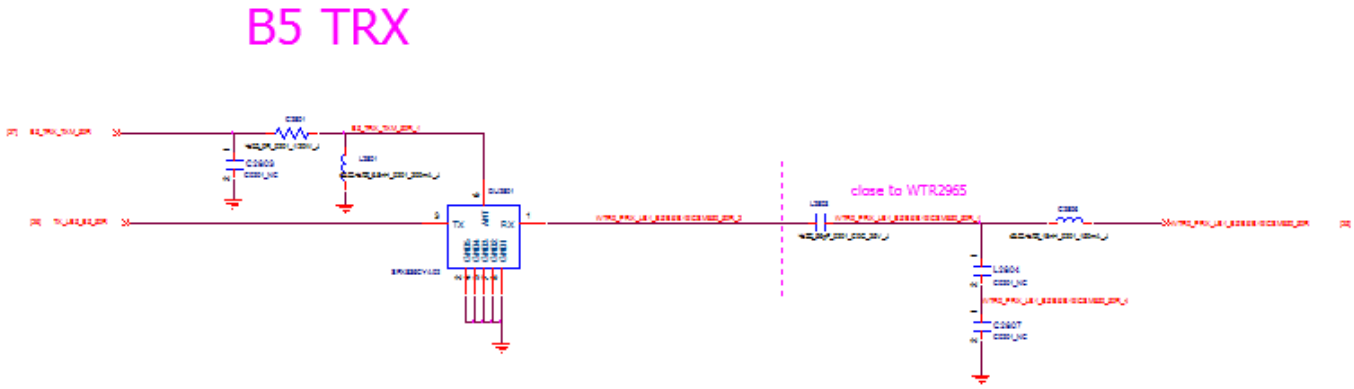

B7 Duplexer:

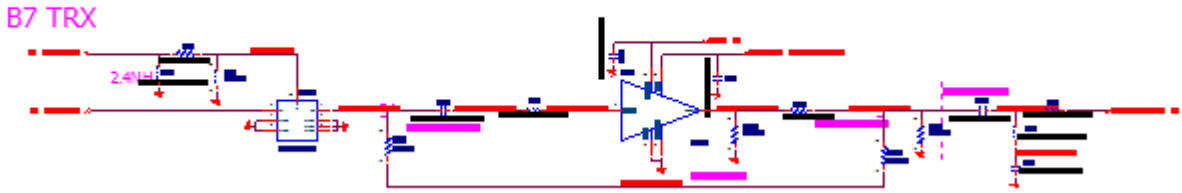

B8 Duplexer:

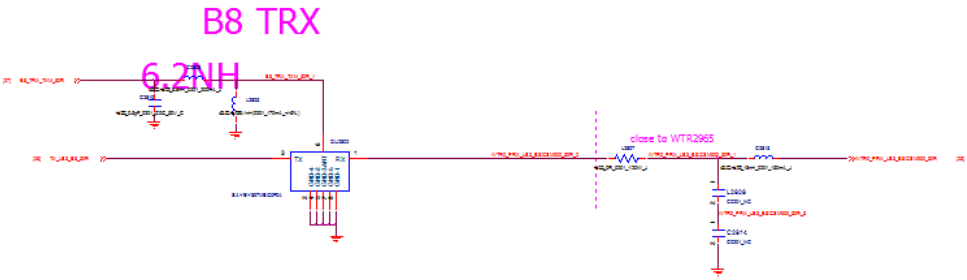

B12/17/28 Duplexer:

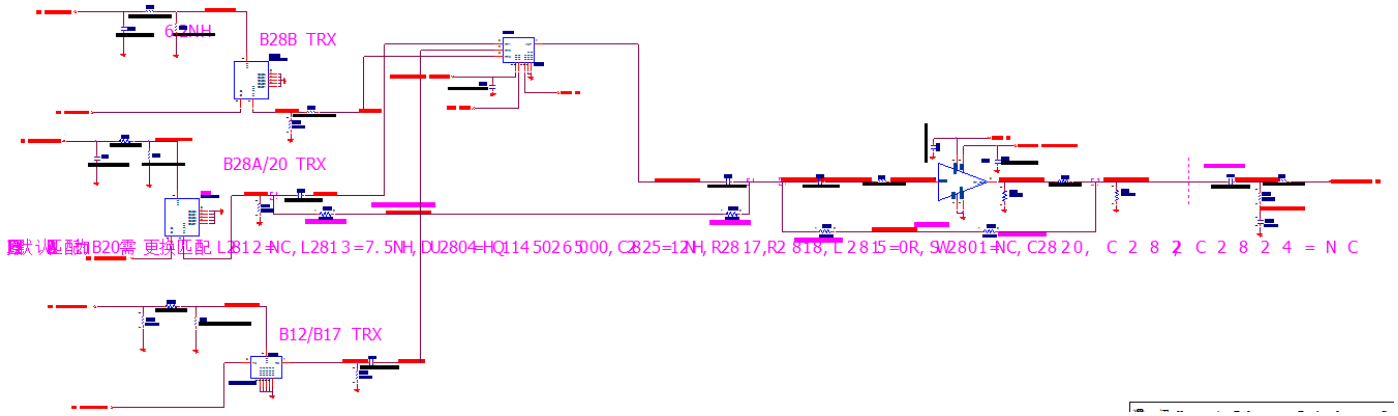

B40 TRX SAW:

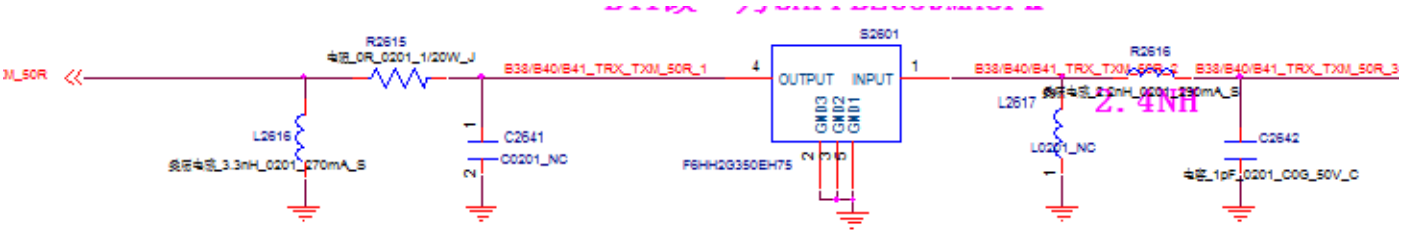

DRX RF SET:

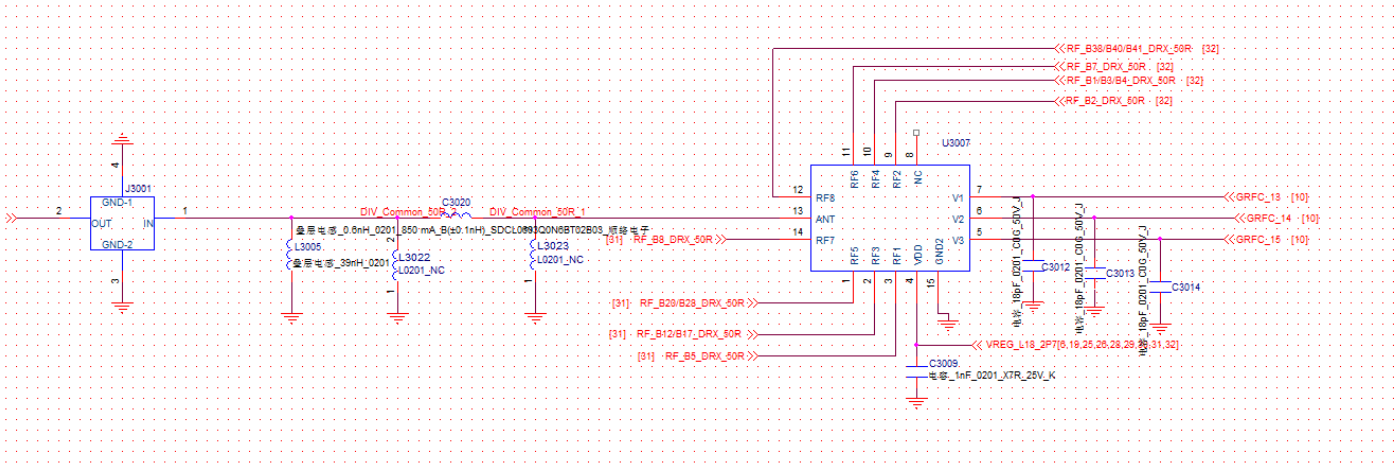

B1/3 DRX SAW:

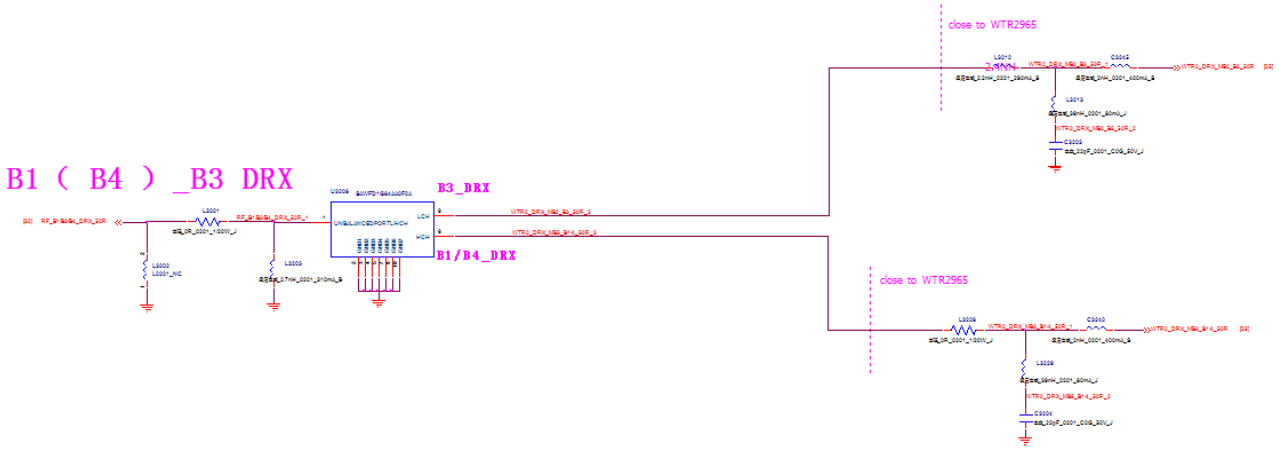

B5 SAW:

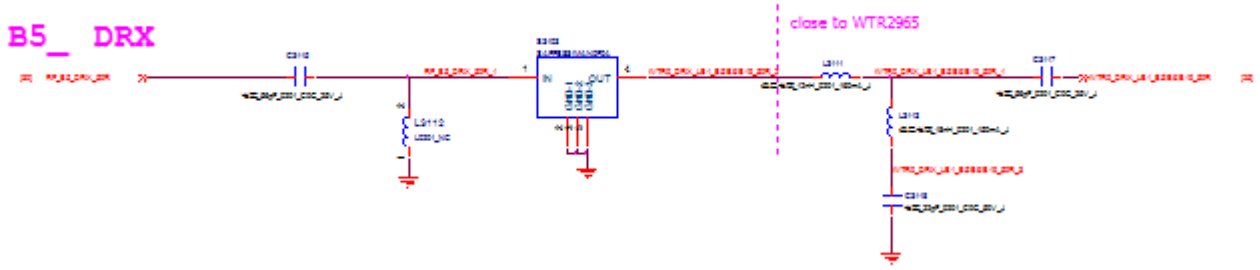

B7 SAW:

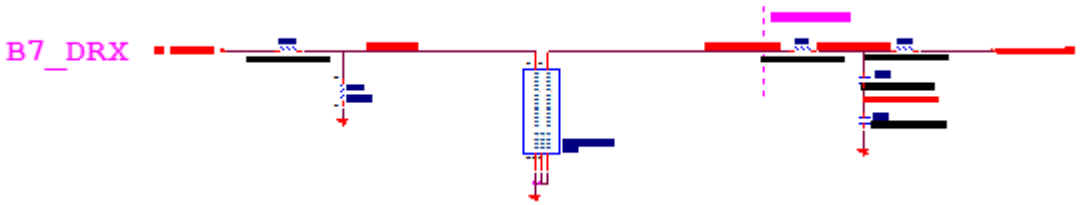

B8 SAW:

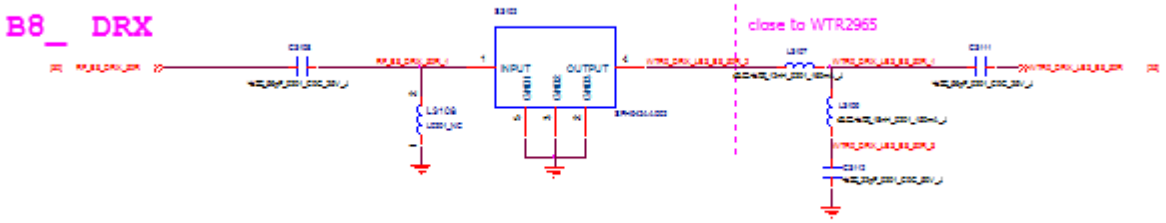

B20 SAW:

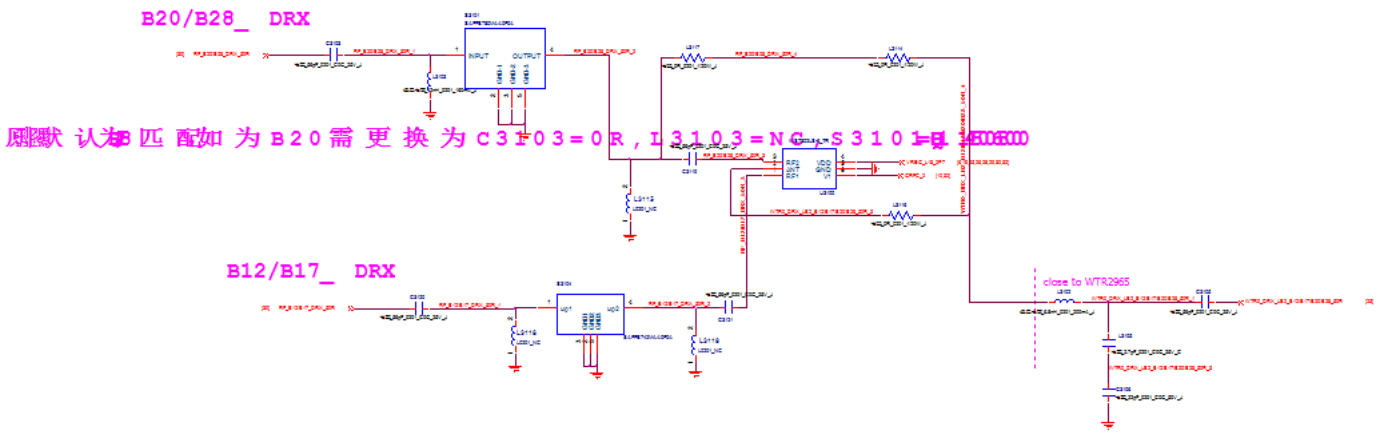
B20/B28_ DRX
默认为B匹配如为B20需更换为C3103=0R，L3103=NC，S3101=0L
B12/B17_ DRX
close to WTR2965

B38/41 SAW:

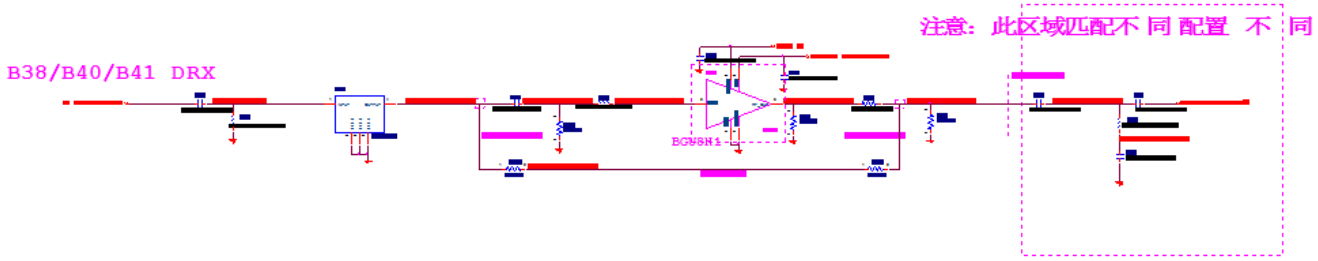
注意：此区域匹配不同配置不同
B38/B40/B41 DRX

2.2RF Block Diagram:2G/3G/4G(GSM&WCDMA&LTE)System

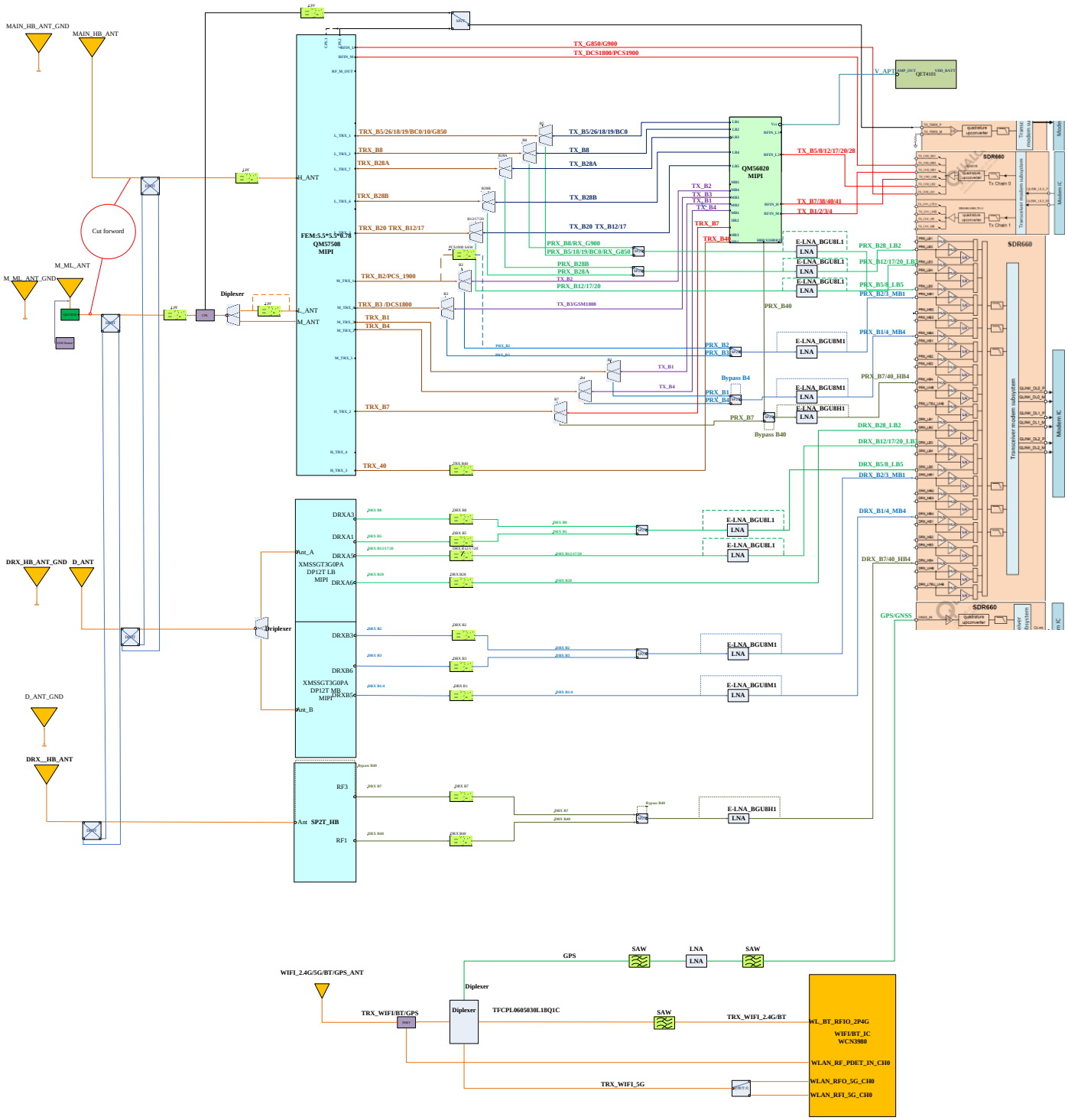

2.3 Key Components

编号	位号	物料描述
1	U2602	PA
2	U2701	FEM
3	S2903	B1 双工器

4	DU2801	B5 双工器_单端_1814,
5	DU2904	电磁干扰双向阻带滤波器_B7_单端
6	DU2802	电磁干扰双向阻带滤波器_Band8_单端
7	U3007	射频开关_700-2690Mhz_Murata
8	U3208	B1/B3/B4 _DRX_1511
9	S2904	Band 3 双工器
10	S3203	GSM1900/RX_SAW_1109
11	S3103	B5/B26/B18/B19_DRX_1109_单端,
12	S3202	B7_DRX_1109
13	S3102	声表面滤波器_B8_RX
14	S3101	声表面滤波器_B28_RX
15	U2501	TRC IC
16	DU2804	电磁干扰双向阻带滤波器_Band28A_单端
17	DU2901	B2 双工器
18	S2905	B4 双工器
19	DU2803	B28B 双工器
20	DU2805	B12/17 双工器
21	S3202	B38/41 DRx SAW
22	S3104	B12/17 DRX SAW

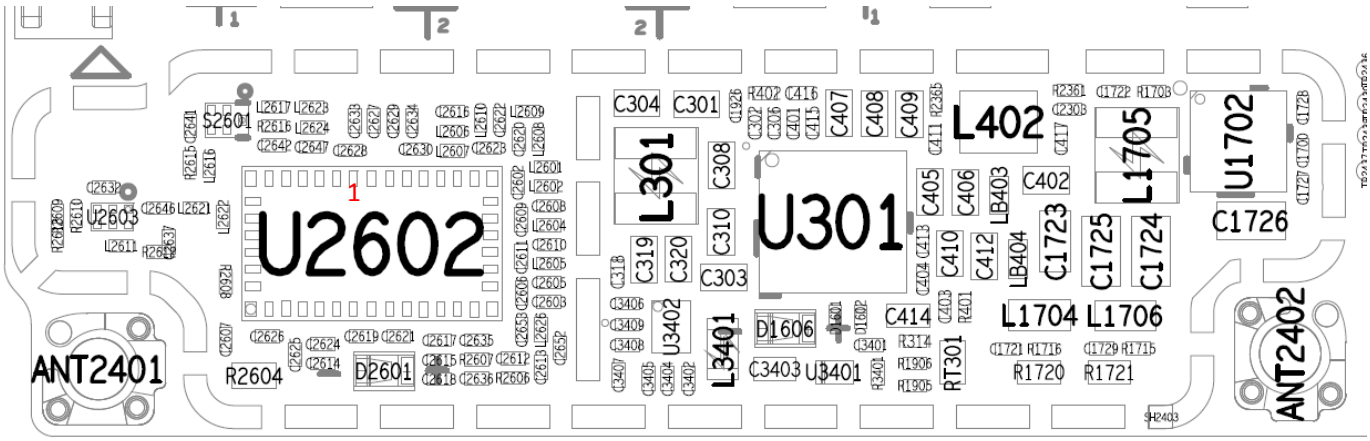

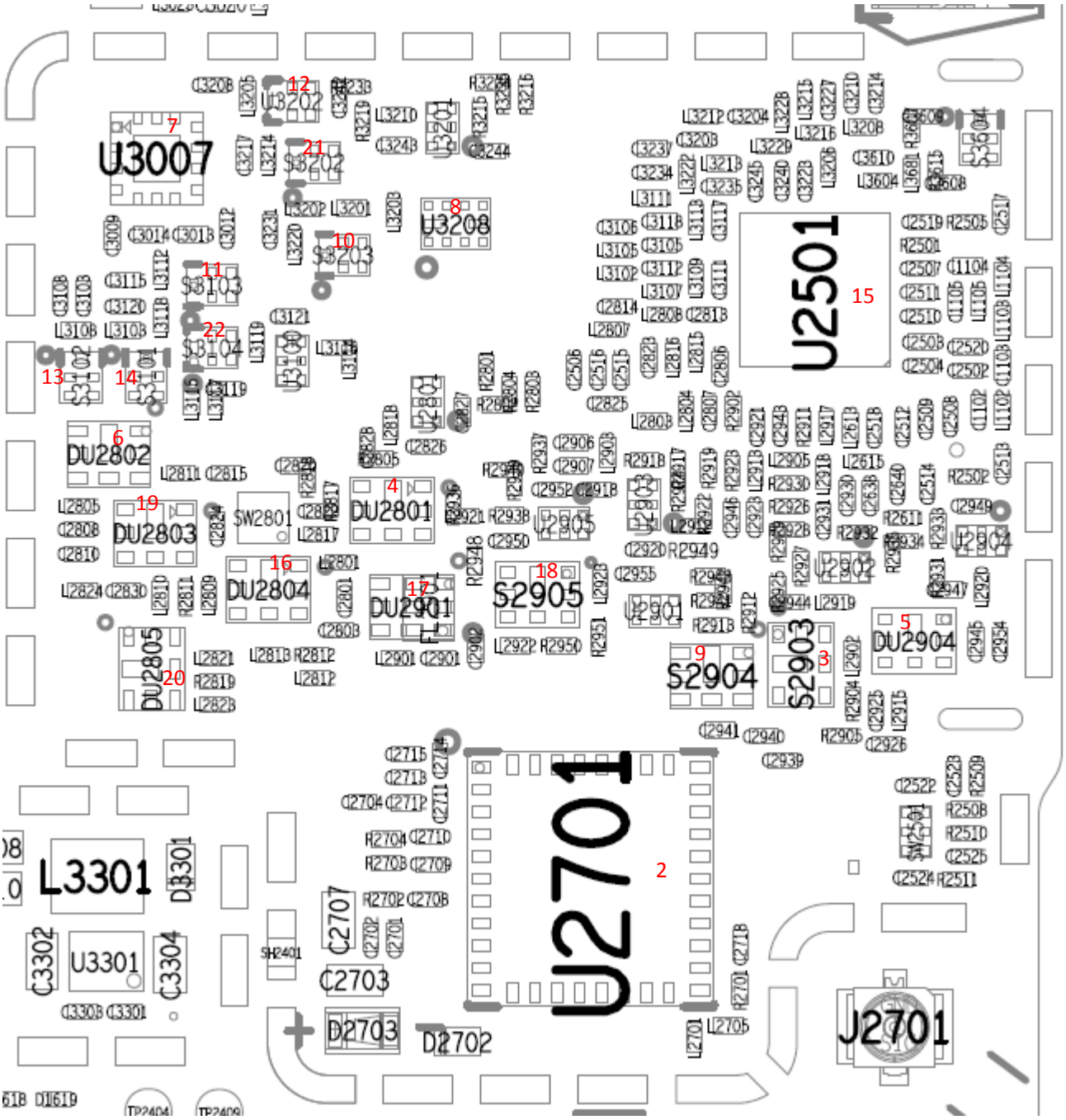
U3007
U3202
U3208
U2501
DU2802
DU2803
DU2801
DU2804
DU2901
S2905
S2904
S2903
DU2904
DU2805
L3301
D3301
C3302
U3301
C3304
C2707
C2703
D2703
D2702
U2701
J2701

3.WIFI/GPS/BT

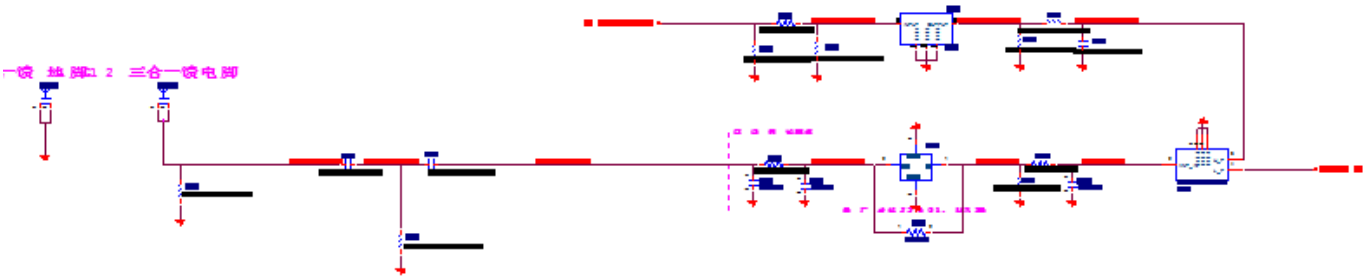

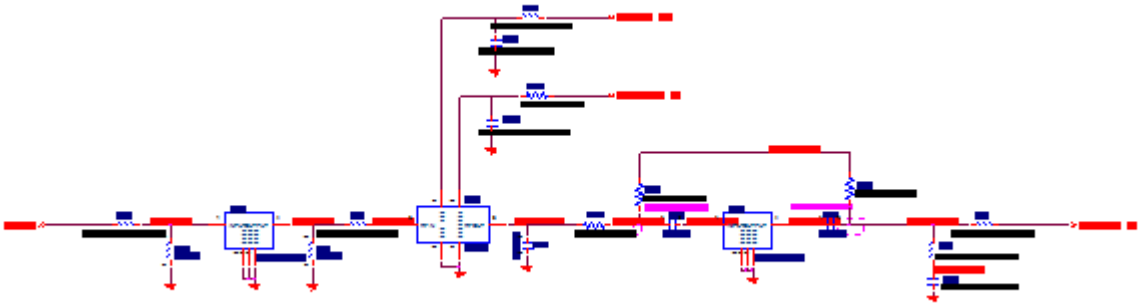

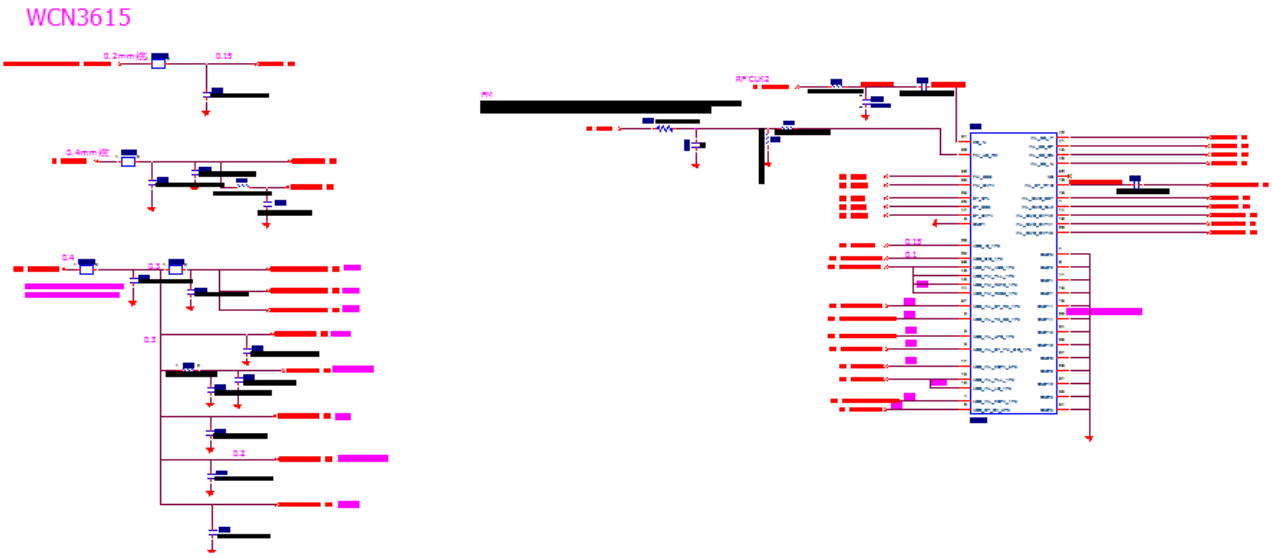

3.2 RF Block Diagram :WIFI/GPS/BT System

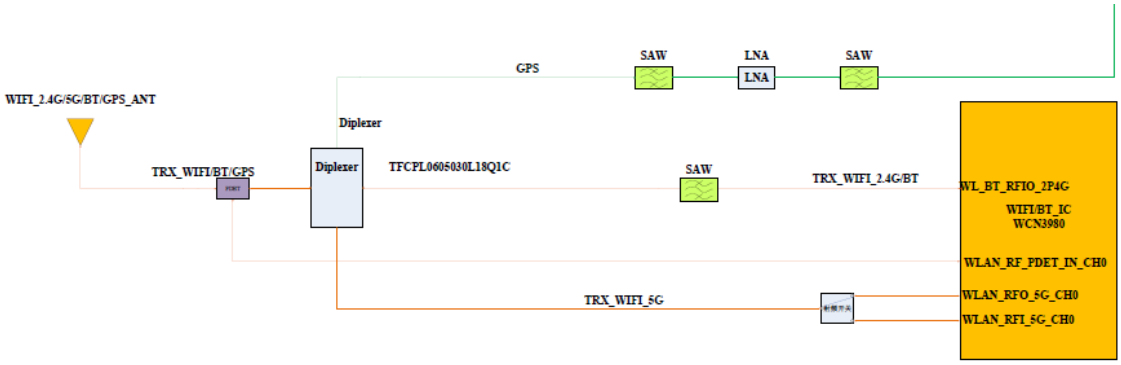

3.3Key Components

1	S3603	SAW_GPS BEIDOU_RX1109
2	U3601	射频 LNA_1575MHz(GPS)
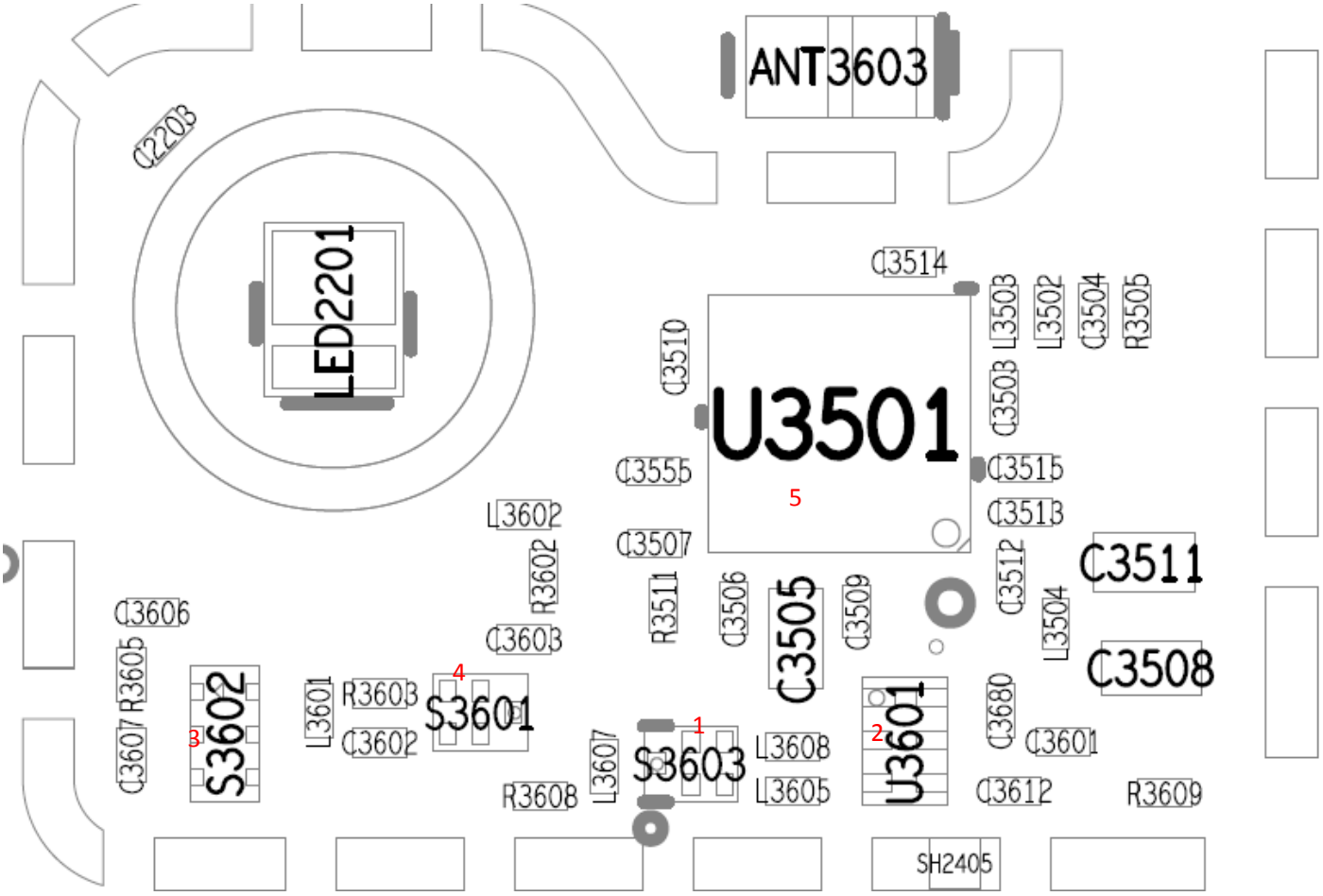
3	S3602	电磁干扰双向阻带滤波器 _1.575GHz/2.4GHz/5GHz_Triplexer
4	S3601	LPF_2402.5-2481.5MHz_1109
5	U3501	WCN IC